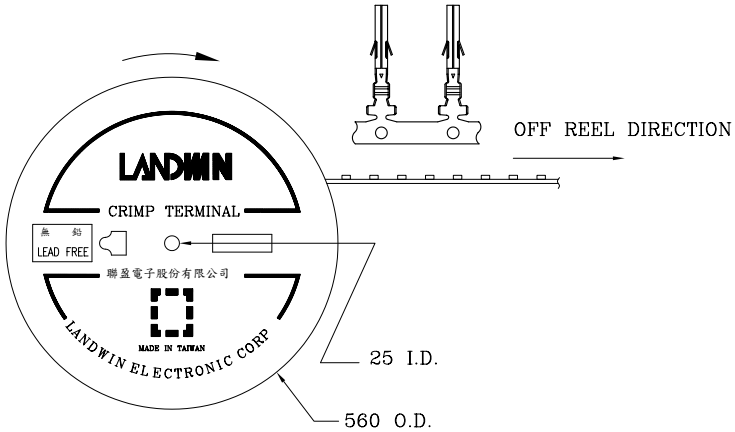

ROLL FORM PACKAGE

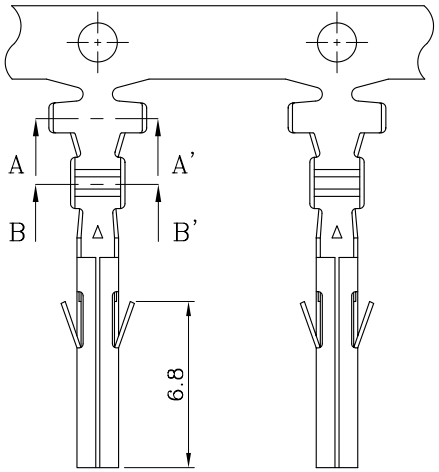

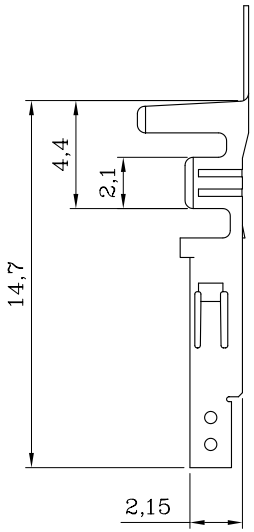

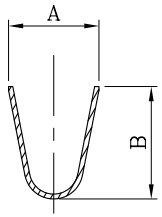

SEC. A–A'

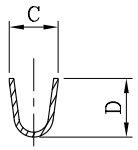

SEC. B–B'

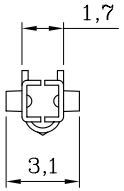

DESCRIPTION OF ORDER NO.:

4203T F X 1 X – 1A

4203T F X 1 X

- TYPE NO. — F
- WIRE GUAGE RANGE — X
- MATERIAL NO. — 1
  - 1: PHOSPHOR BRONZE
- PLATING NO. — X
  - R: TIN–PLATED
  - 1: GOLD FLASH–PLATED
  - N: POST TIN–PLATED
- INSULATION DIA.= ø3.3 — 1A

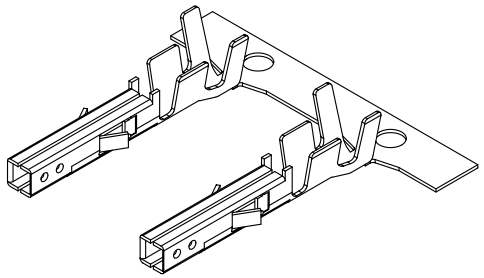

ISOMETRIC VIEW

ORDER INFORMATION AND DIMENSION:

ORDER NO.	TERMINAL TYPE	WIRE GUAGE RANGE (AWG)	INSULATION DIAMETER	Q'TY/REEL	A	B	C	D
4203TF11X–1A	CHAIN	#16	ø3.3 MAX.	4,000 PCS	3.6	4.5	2.3	2.9
4203TF11X	CHAIN	#16	ø2.9 MAX.	5,000 PCS	3.8	4.2	2.3	2.9
4203TF21X	CHAIN	#18 ~ #24	ø2.7 MAX.	5,000 PCS	3.8	4.2	2.0	2.3
4203TF31X	CHAIN	#22 ~ #28	ø2.2 MAX.	5,000 PCS	2.3	2.3	1.65	1.8

NOTES:

1. MATERIAL: PHOSPHOR BRONZE
2. USE WITH 4200F SERIES PLUG HOUSING:
   - <1> 4200FAX0X SERIES
   - <2> 4200FAXAX SERIES
   - <3> 4200FXX0X SERIES
   - <4> 4200FXXAX SERIES
   - <5> 4200FXXAX SERIES
3. INFORMATION IN THIS DRAWING IS NOT CONSIDERED AS FINAL.

MATERIAL: SEE NOTES

FINISH(COLOR): SEE NOTES

REV.	REVISION RECORD	DATE
W1	NEW RELEASE	31-DEC-14'

RoHS Compliant REACH Compliant

Sales Drawing

LANDWIN 聯盈電子股份有限公司 LANDWIN ELECTRONIC CORP.

GENERAL TOLERANCE:	PROJECTION	SCALE	UNIT	SHEET NO.	REV
		FREE	MM	1 / 1	W1

DRAWN R.G.

CHECKED J.L.Lin

APPD H.Y.Lin

DATE 31-DEC-14'

ANGULAR ±3°

DRAW NO. (BQ) 4203TFX1X(–1A)

TITLE: CRIMP TERMINAL (4200F SERIES)

THIS DRAWING CONTAINS INFORMATION THAT IS PROPRIETARY TO LANDWIN ELECTRONIC CORP. SHOULD NOT BE USED WITHOUT WRITTEN PERMISSION.